HYDAC INTERNATIONAL

Selector Valve
RV 713

Key valve features

RV 713 is a 3 way selector valve designed for flows up to 160 l/min and max. operating pressures up to 250 bar.

Spools, both 2 and 3 position, are available in various types including spools with built in check valves. Standard spools are designed with under lap.

A wide range of spool controls, both for manual operation as well as for remote control, are available.

Applications

Typical applications for RV 713 are tipping gears and demountable bodies.

The configeration with check valve spools are typical used as a limit switch on tipping gears.

Technical data

Pressures / Flows	
Max. operating pressure per port:	
A, B, C:	250 bar (25,0 MPa)[1]
Max. permissible flow port A:	160 l/min
Fluid temperature range:	-15 °C up to +80 °C

[1] Manual operated valves with spring centered or spring returned spools are only recommended when switching to neutral always takes place during pressure unloaded conditions.

Further data	
Spool control force:	
Neutral position:	280 N
Max spool stroke:	400 N
Permissible contamination level:	Equal or better than 20/18/14 as per ISO 4406
Viscosity range:	10 – 400 cSt Higher viscosity allowed at start up
Leakage B.C → A at 100 bar 32 cSt and 40 °C:	< 40 cc/min
Pressure fluid:	Mineral oil and synthetic oil based on mineral oil HL, HLP according to DIN 51524

Higher values are possible, depending on application. For applications with demands that exceed stated data above, please contact us for consideration.

MTTFd value after consultation with HYDAC.

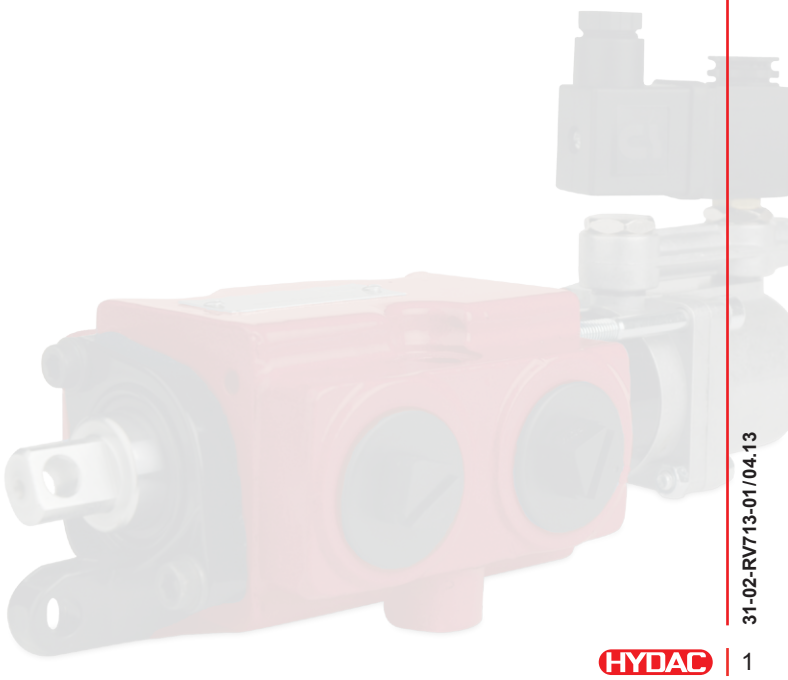

Dimensions and weight

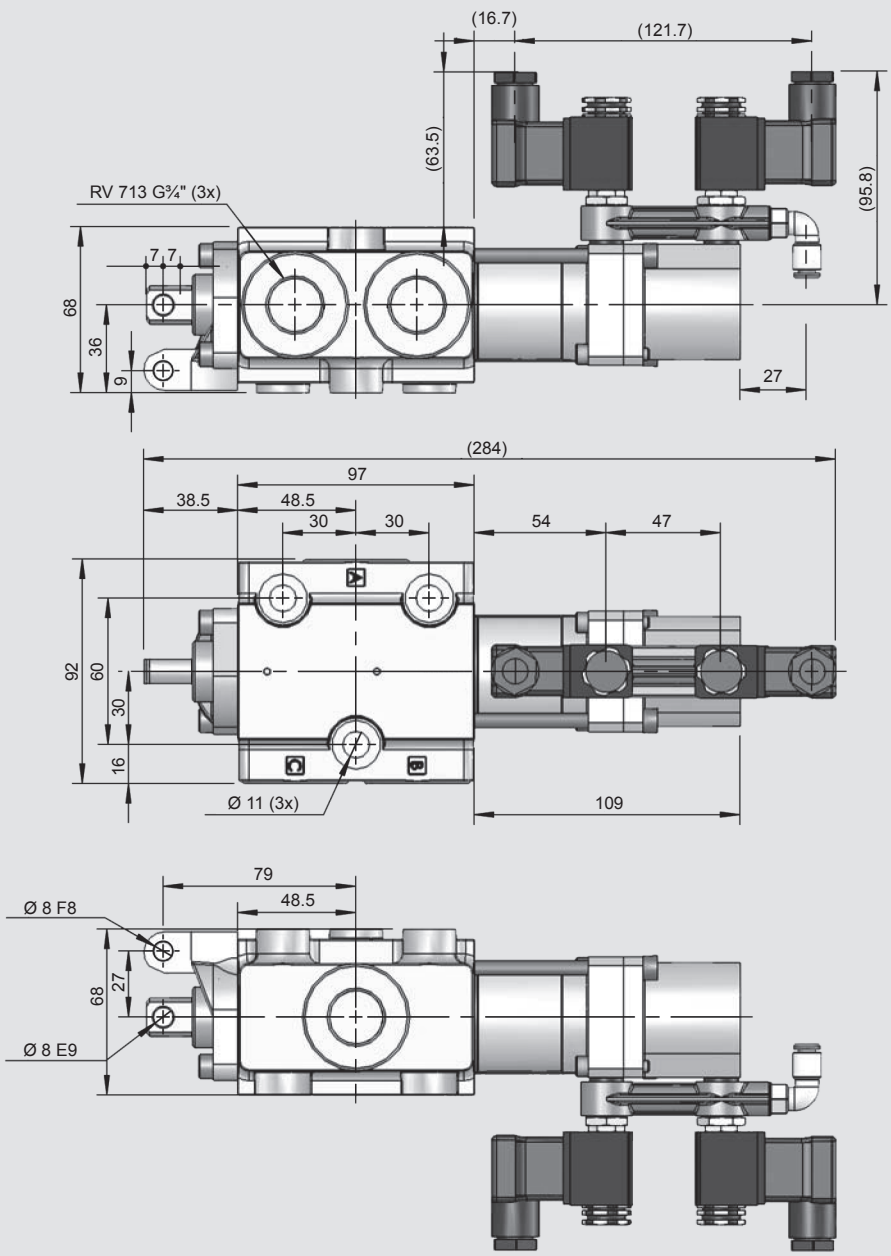

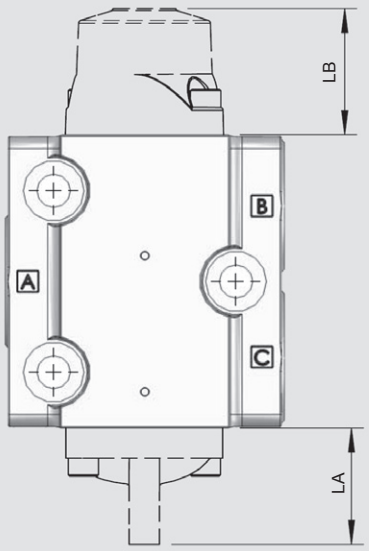

Weight	3 kg

Type	LA [mm]	LB [mm]
9	41.6	
91	41.6	
92	41.6	
93	41.6	
94	41.6	
10	41.6	
21	41.6	
22	41.6	
P - P4	109	
EP	142	
M19RV		38.5
M12		89.5

Pressure drop

Oil temperature / viscosity for all graphs: +40 °C / 32 cSt

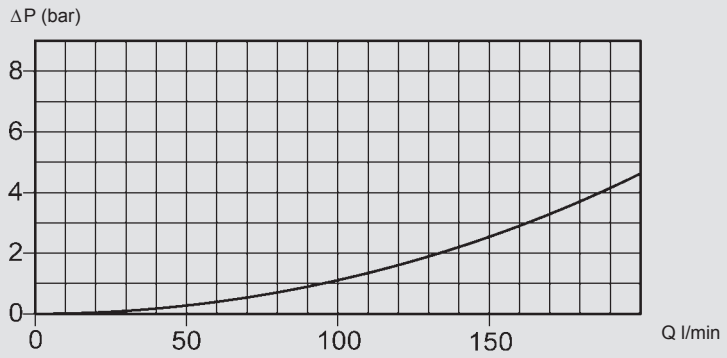

Pressure drop A - B, A - C

Spool controls

Spool control 9

Spring centering

Spool control 91

Spring return from position II to position I

Spool control 92

Spring return from position III to position I

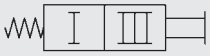

Spool control 92B

Spring return from position III to position I. OBS! B port must be plugged

Spool control 93

Spring return from position I to position II

Spool control 94

Spring return from position I to position III

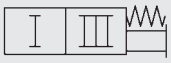

Spool control 10

Detents in positions I, II and III

Spool control 21

Detents in positions I and II

Spool control 22

Detents in positions I and III

Spool control P

Pneumatic on/off spring centered*

Spool control P1

Pneumatic on/off spring return from position II to position I*

Spool control P2

Pneumatic on/off, spring return from position III to position I*

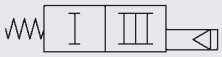

Spool control P3

Pneumatic on/off, spring return from position I to position II*

Spool control P4

Pneumatic on/off, spring return from position I to position III*

Spool control EP24

Electro-preumatic on/off 24 V, spring centered*/**

Spool control EP12

Electro-preumatic on/off 12 V, spring centered*/**

Spool control EP124

Electro pneumatic on/off, 24 V, spring return from position II to position I*/**

Spool control EP112

Electro pneumatic on/off, 12 V, spring return from position II to position I*/**

Spool control EP224

Electro pneumatic on/off, 24 V, spring return from position III to position I*/**

Spool control EP212

Electro pneumatic on/off, 12 V, spring return from position III to position I*/**

Spool control EP324

Electro pneumatic on/ off, 24 V, spring return from position I to position II*/**

Spool control EP312

Electro pneumatic on/off, 12 V, spring return from position I to position II*/**

Spool control EP424

Electro pneumatic on/off, 24 V, spring return from position I to position III*/**

Spool control EP412

Electro pneumatic on/off, 12 V, spring return from position I to position III*/**

* Connection G 1/8" BSP, max pneumatic supply pressure 10 bar

**

Power consumption	4.8 W
Rated voltage	12 and 24 V
Max voltage variation	+/- 10 %
Duty factor	100 %
Connection	according to EN175301-803/B
Protection class	IP65

Spools

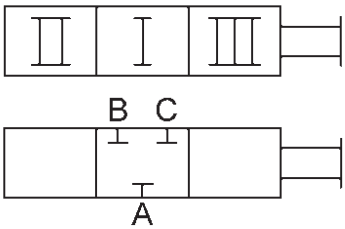

	Function	Code
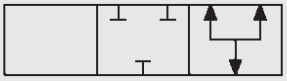	Float spool, 2-position	1A
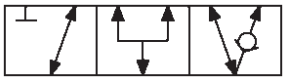	Spool with built in check valve	2B
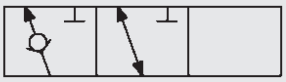	Spool with built in check valve, shall be used with the valve housing C-port plugged	2C
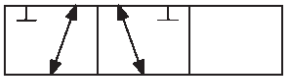	Selector spool, 2-position	3A
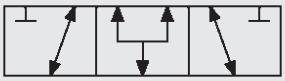	Selector spool, with float function in position I, 3-position	4A
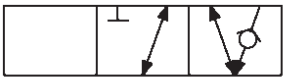	Spool with built in check vallve, normally B-port plugged. For use with bracket M12 and spool control 92B	4C
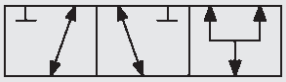	Selector spool with float in position III	5A
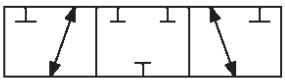	Selector spool with all ports closed in position I	7A

Brackets

Bracket M12

Bracket including maneuver pin.
To be used together with Spool 4C and Spool control 92B

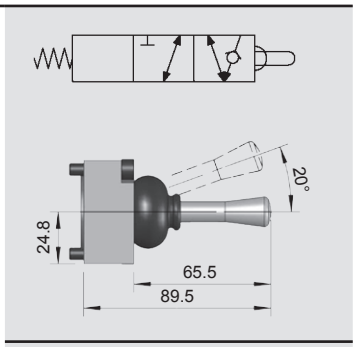

Bracket M19RV

Bracket for 2 or 3 positional spools with standard spool end

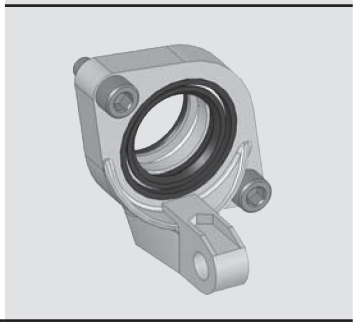

Note

The information in this brochure relates to the operating conditions and applications described.

For applications or operating conditions not described, please contact the relevant technical department.

Subject to technical modifications.

Nordhydraulic
HYDAC INTERNATIONAL

Head Office
HYDAC INTERNATIONAL GMBH

Industriegebiet
66380 Sulzbach/Saar
Germany

Phone: +49 6897 509-01
Fax: +49 6897 509-577

E-mail: mobilevalves@hydac.com
Internet: www.hydac.com